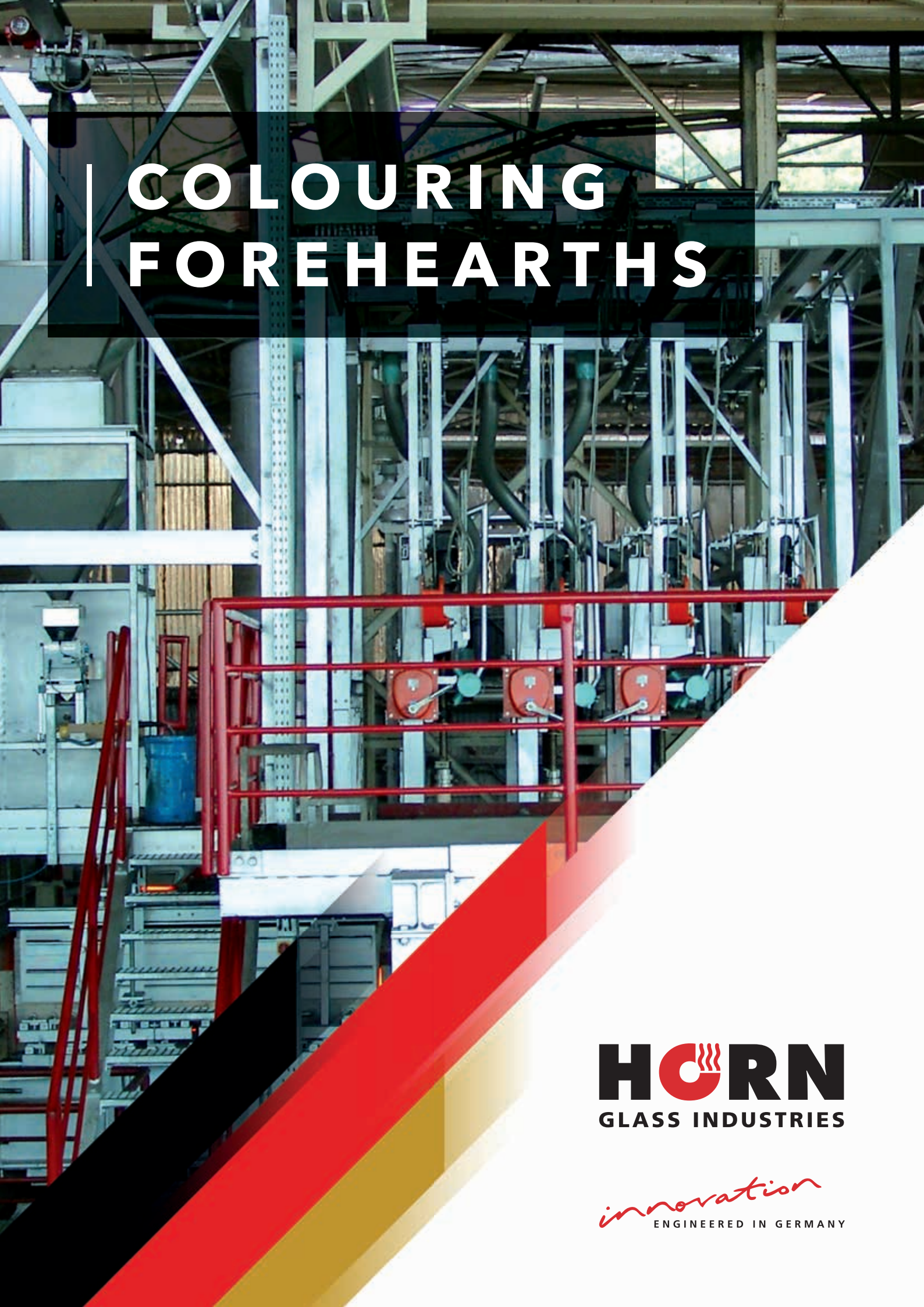

COLOURING FOREHEARTHS

HORN
GLASS INDUSTRIES

innovation
ENGINEERED IN GERMANY

HORN® COLOURING FOREHEARTHS

A colouring forehearth is a favourable method for the production of coloured glass without having to change the colour in the entire furnace. The advantages are having two colours simultaneously and the possibility of a temporary colouring process. Thus, the flexibility of the glass melting furnace can be increased and several different colours can be produced from one furnace.

For many years HORN® has successfully designed colouring forehearths according to the specific requirements of glass manufacturers.

Many colouring forehearths for varying glass applications such as container glass, tableware or sheet glass have been installed worldwide. All colouring forehearths can be provided together with refractory material, combustion system and control equipment.

Colouring agents (colouring product) are used for the colouring process. Copper, chrome, nickel, selenium, cobalt and other elements can be used to produce a wide range of colours. Various combinations of these elements enable an even larger palette of colours.

FOREHEARTH DESIGN

All forehearths are individually designed depending on the colours required, the tonnage and the conditions on site. All forehearths generally consist of a heating-up zone, a melting zone, a stirrer zone, a cooling zone and an equalising zone.

GLASS TYPES
HORN® forehearths can process various types of glass, e.g. cosmetics glass, crystal glass, tableware, container glass and figured glass.

GLASS COLOURS
There is a wide range of colours that can be used in forehearths, such as black, grey, smoke, blue, purple, violet, pink, bordeaux or green, including different types of green such as antique green, emerald green or dead leaf green.

REFRACTORY

The channel blocks in the heating-up, melting and stirrer zones are usually made of fused cast AZS (Aluminium-Zircon-Silicate). Cooling and equalising section channels can be provided as fused cast AZS, alpha / beta alumina or bonded zircon mullite.
Superstructure material in the heating-up and stirrer zone is made of special bonded alumo-zirconoxide refractory material (zircon mullite) with high density and low porosity in order to reduce corrosion due to the high temperature and aggressive evaporations from the colouring agent. The refractory superstructure in the cooling and equalising zones features a special design for optimal cooling and heating efficiency and is made of high alumina materials. Ultramodern insulation materials are used for all zones to achieve extremely low heat loss values in order to reduce fuel consumption and improve the thermal homogeneity of the glass.

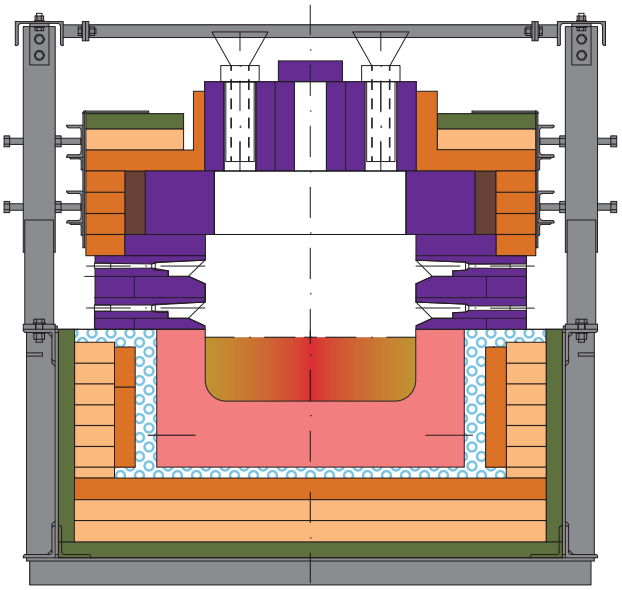

Individual colouring forehearth layouts:

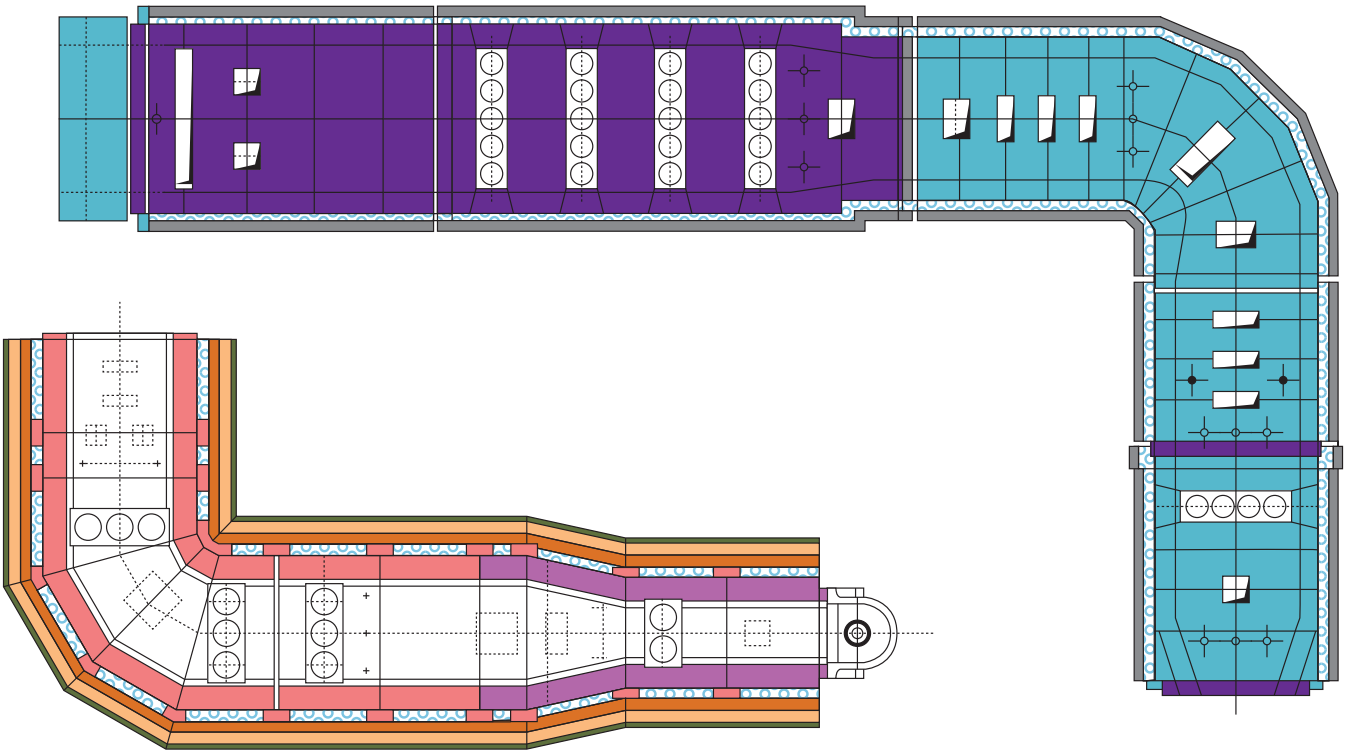

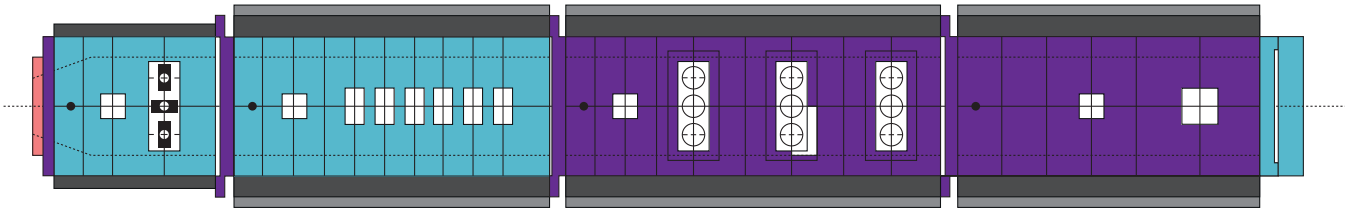

Equalising zone Cooling zone Stirrer zone Melting zone

MELTING ZONE

The glass melt needs to enter the melting zone at a temperature between 1260 °C and 1320 °C.

For this reason, it might be necessary to provide a heating-up zone in front of the melting zone.

A dosing device and water-cooled feeding tubes are installed at the start in order to feed the colouring agents onto the glass surface.

The combustion system is intensified by means of two burner rows at each side along the melting zone to compensate for the heat loss of the water-cooled feeding tubes.

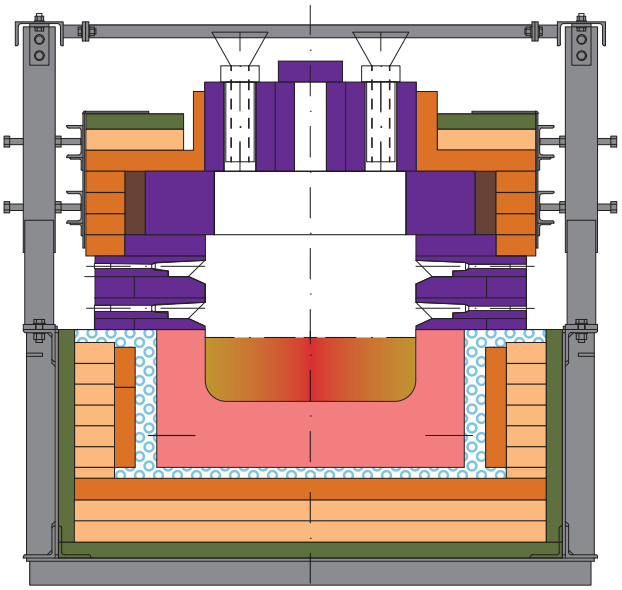

STIRRER ZONE

The function of the stirrer zone is to mix the molten colouring agent with flint glass. For this purpose the roof of this zone has several openings through which ceramic stirrers are installed.

The number of stirrers and stirrer rows depends on the type of colours, intended colour homogeneity, total pull and length of the forehearth. A certain amount of residence time has to be considered in this zone.

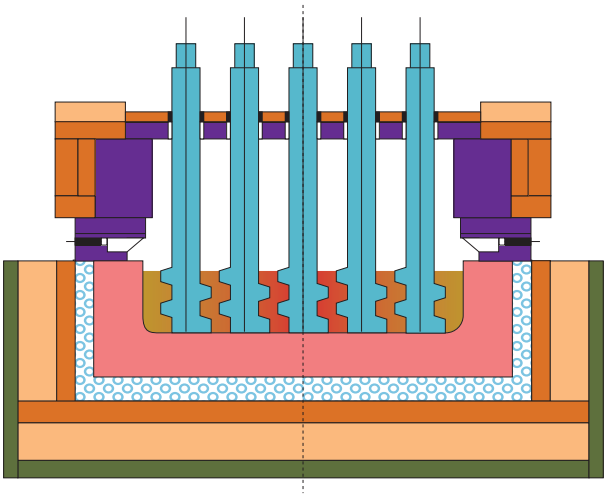

COOLING ZONE

The first zone after the stirrer zone is constructed as the cooling zone. Due to the higher temperature required for melting and stirring, the glass has to be cooled and conditioned for the forming process. Cooling facilities such as radiation openings and/or cooling air channels in the roof are applied according to the type of forehearth such as the GCS® Series 200 or 301-advanced. Cooling zones are designed individually depending on the articles being produced and the type of colouring agents.

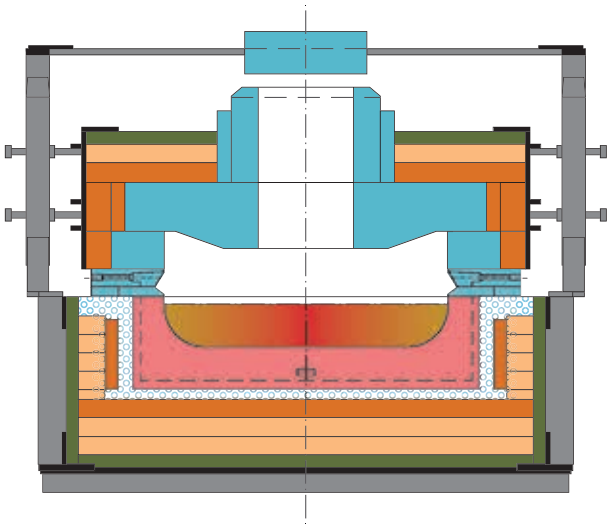

GCS® 200

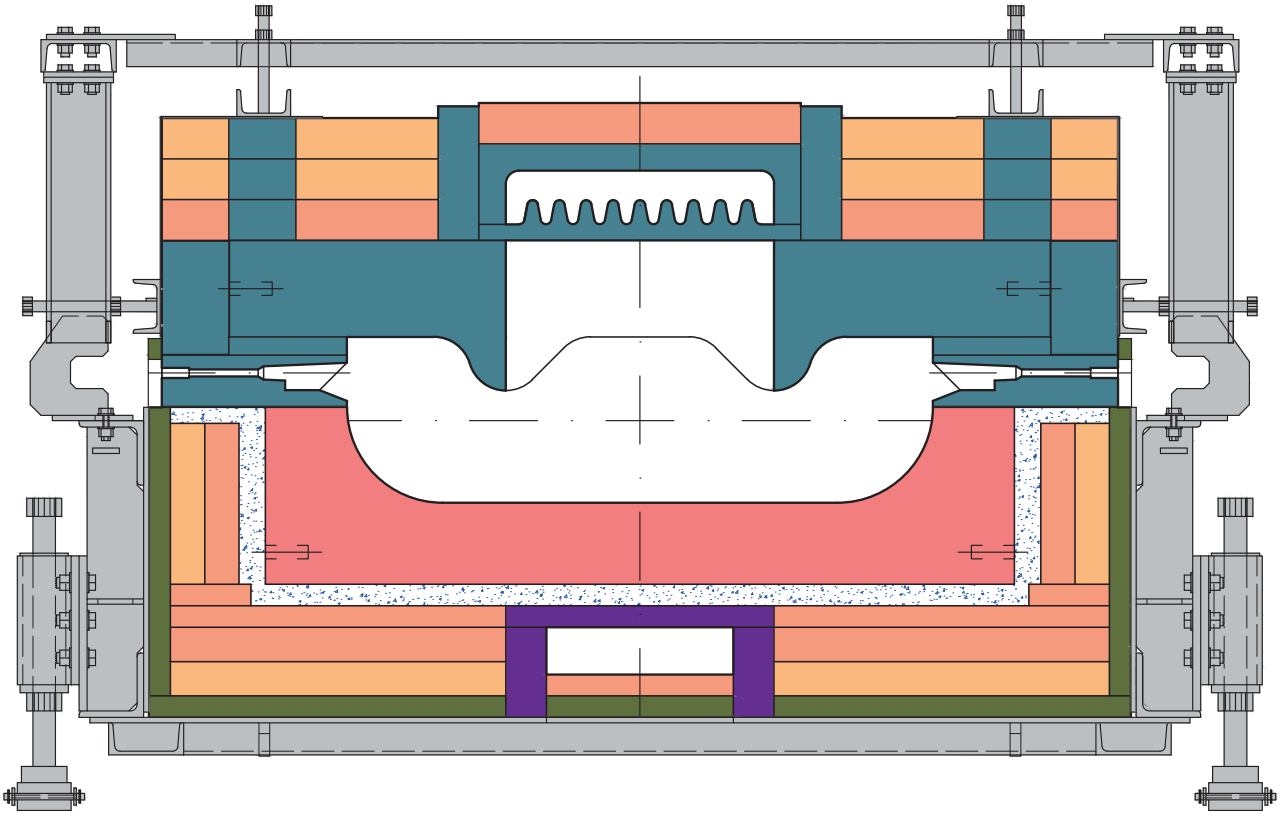

GCS® 301-advanced

EQUALISING ZONE

The equalising zone, which is part of the colouring forehearth, ensures the final conditioning for the forming process. An additional stirring system is advantageous for temperature homogeneity. The openings in the superstructure for the stirrers are planned during engineering.

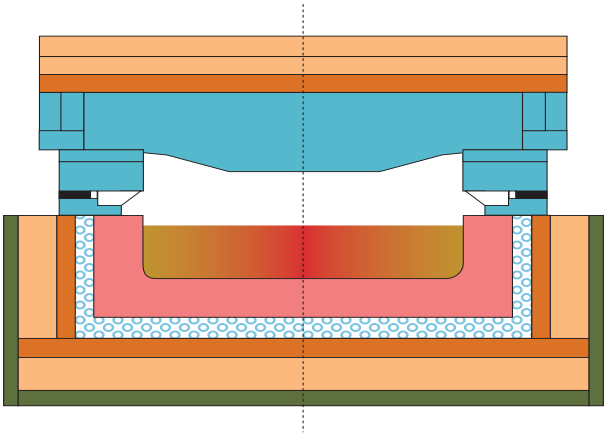

DOSING DEVICE

In order to feed the colouring agents, a specially designed feeding unit needs to be installed. This feeding unit consists of several components:

- A small batch hopper to store the colouring agents
- A dosing chute to feed the adjustable quantity of agents from the hopper to a weighing pan
- A special weighing socket to weigh the exact quantity of the colouring agent
- A conveyor device to charge the pneumatic deduster
- A pneumatic deduster to reduce the fine particles from the agent to prevent refractory corrosion
- Charging funnels with distributor for single or more charges to feed the agents through the roof of the forehearth onto the glass surface

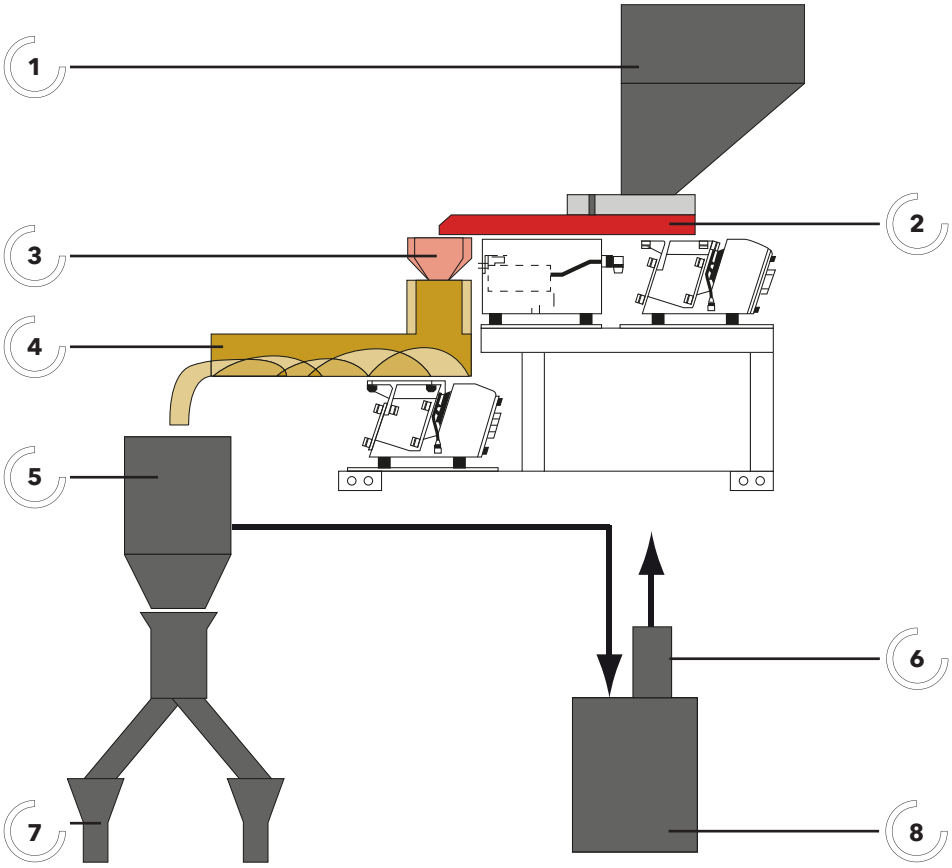

1. Hopper
2. Dosing channel
3. Weighing pan
4. Conveying device
5. Pneumatic deduster (cyclone)
6. Filter
7. Water cooled feeding tube
8. Dust collector

STIRRER SYSTEM

A stirrer bank consists of several stirrers, coupler bearings and a chain drive as well as cooling equipment for drives and couplers. The elements are mounted as a complete unit in a steel support frame together with a small control panel to control the rotating direction and the speed of the stirrer. The stirrer types are engineered individually to achieve the best results in colour homogeneity.

Each individual stirrer bank can be winched upwards out of the glass separately in order to execute maintenance work (e.g. change of stirrers). In this case the stirrers hang right above the forehearth superstructure. Alternatively, the stirrer bank can be moved laterally to a platform beside the forehearth which facilitates maintenance procedures such as changing the stirrers.

LAMBDA CONTROL

The lambda control is an optional tool, which ensures constant oxygen content in the gas air mixture. Hereby the mixture can be set up in reducing, neutral or oxidising conditions without measurement and manual adjustment at the gas skids. This significantly simplifies the procedure of frequent colour changes to colours which require different combustion conditions. Furthermore, the lambda control is advantageous when the gas composition fluctuates from time to time.
The gas is analysed by a sensor. According to the gas composition and the required lambda value, the required quantity of air is mixed with gas.

GENERAL INFORMATION

ADVANTAGES

- **Wider range of production possibilities**
- **Wide colour range to meet most requirements**
- **Free colour matching**
- **High flexibility (small production series facilitated)**
- **Faster recolouring**
- **Low discolouring**
- **Good colour distribution**
- **Lower energy requirements**

SPECIAL EQUIPMENT OPTIONS

- **Drainage system VARI-DRAIN®**
- **Stirring system for equalising zone**
- **CORA® mixture heating system**

DESIGN FEATURES

- **Length from 18' or longer is possible and can be adapted to local situation**
- **The GCS® Series 200 or 301-advanced forehearth cooling system is applied after colouring**

LET'S GO FULL CIRCLE. WWW.HORNGLASS.COM

The key to HORN®'s extensive expertise in all fields of glass melting technology is the profound understanding of each detail within the entire process, making HORN® the specialist for technological progress and innovation for each aspect of a glass plant. In addition to its knowhow about individual elements such as furnaces, HORN® has expanded its services to become a one-stop supplier for turn-key plants. From initial planning to full operation – HORN® stands by you all the way.

PLANNING + ENGINEERING

MANUFACTURING

SERVICE / INSTALLATION + SUPPORT

LET'S GO FULL CIRCLE.

HORN GLASS INDUSTRIES

HORN® GLASS INDUSTRIES AG
BERGSTRASSE 2
D-95703 PLÖSSBERG/GERMANY

TEL.: +49 9636 / 9204-0
FAX: +49 9636 / 9204-10

WWW.HORNGLASS.COM

04/2020