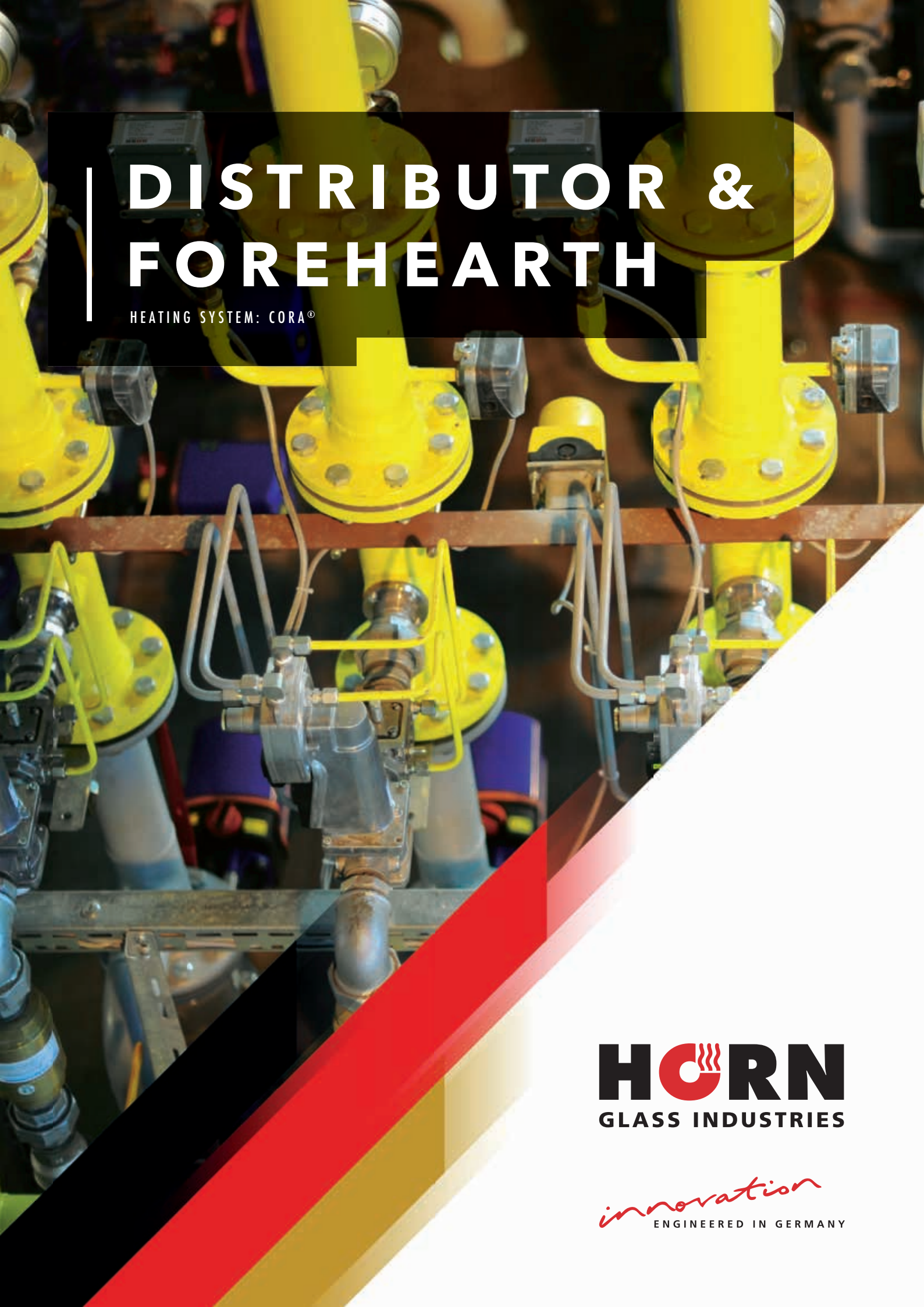

DISTRIBUTOR & FOREHEARTH

HEATING SYSTEM: CORA®

HORN GLASS INDUSTRIES

innovation ENGINEERED IN GERMANY

The CORA® system is a specially designed supply skid to pre-mix gas and combustion air in a constant ratio for combustion inside the distributor and forehearths.

The major advantage of this combustion system is its nearly 100% stable, COnstant RAtio in gas/air supply over the entire control range under varying operating conditions.

DESCRIPTION

Combustion air is required for the CORA® skids, which is supplied by a special combustion air fan, whose speed is controlled by a variable speed drive. This control guarantees a constant combustion air pressure of 60 – 80 mbar. The combustion air fan supplies both the forehearth heating system and the distributor with combustion air. The combustion air fan is always set up with an additional fan as back up.

A gas filter and pressure control skid supply the required gas pressure of 120 mbar. Mutual influences of the individual zones are thus avoided and the entire air system is stabilised and steadied.

The quantity of gas needed for the forehearths can subsequently be determined by a gas volumeter. This can take place either individually for distributor and forehearth or for the entire system.

The gas now enters the individual CORA® skids where an exact gas/air mixture is created. The gas/air mixture is then channelled through a gas mixture line to a gas mixing manifold. Special HORN® HGGB gas mixture burners are installed in this mixture manifold of the forehearth.

ESSENTIAL FEATURES

GAS/AIR MIXER

The required mixing of gas and combustion air takes place in a specially developed mixing pipe (2). The special design ensures that a turbulent current can be maintained even with very small gas and air volumes ensuring a favourable gas/air mixture.

The size of the gas/air mixers depends on the heating levels required in the zones to be heated and can be changed easily.

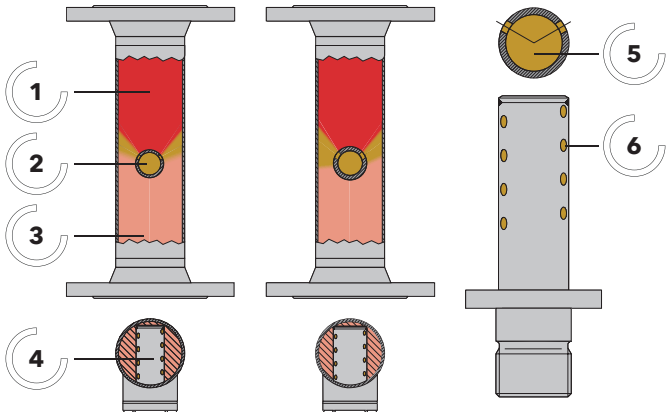

1. Gas/air mixture

2. Gas

3. Air

4. Air mixing area

5. Mixing nozzle changeable

6. Nozzle area

FUEL OUTPUT CONTROL

The burner output in the respective control section is controlled via the combustion air volume. The volume of the combustion air can be adjusted by the motor control valve (3). This features a control cone with an equal percentage KV value through which particularly accurate regulation of the combustion air volume is possible. The required volume of gas is automatically supplied by the ratio controller (4 + 5) as described in the section "Gas/air ratio control."

GAS/AIR RATIO CONTROL

The combustion air flows through a differential pressure orifice plate (2) before it flows into the mixing pipe. The differential pressure is transferred to a ratio controller (4 + 5) which supplies the gas pressure proportional to the determined volume of air on the output side.

An absolutely stable gas/air ratio along the entire control range is achieved due to the ratio control, which works according to volume, as opposed to a Venturi or injector mixer, which work according to pressure.

1. Gas/air mixer
2. Air differential pressure-orifice
3. Air control valve
4. Optional: Gas control valve for lambda control
5. Gas/air ratio controller incl. safety shut-off valve
6. Gas non-return valve
7. Gas flow meter
8. Manometer for mixture pressure indication
9. Mixture pressure switch for maximum pressure (backfire indication)
10. Adjustment flap for minimum firing rate

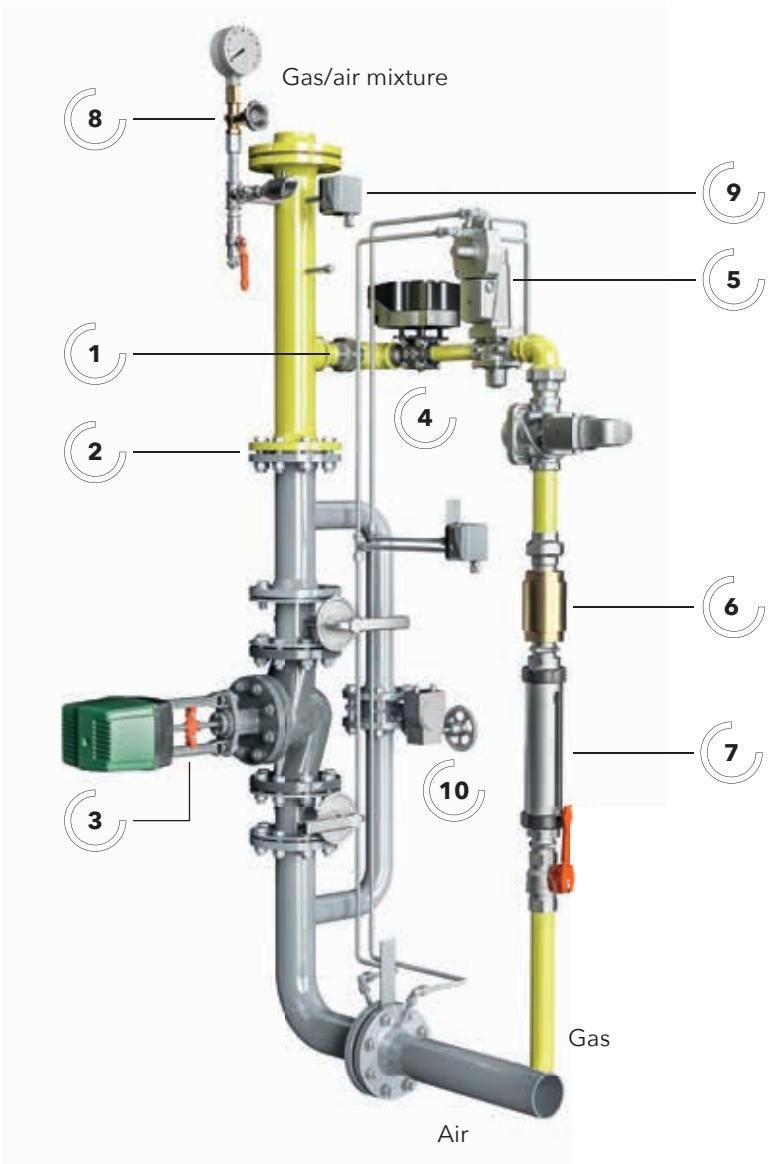

SAFETY SYSTEMS

The CORA® system is equipped with the following safety devices:

- Two safety shut-off valves in series for each zone
- Gas pressure switch for min./max. gas pressure monitoring
- Air pressure switch for min. air pressure monitoring
- Gas pressure switch for min. mixture flow monitoring
- Gas pressure switch for max. mixture monitoring (backfire indication)

SAFETY SWITCH-OFF

The gas supply will be shut off automatically in the following cases:

Shut-off of all zones per skid:

- Emergency push button
- Combustion air minimum pressure
- Main gas minimum or maximum pressure

Shut-off of the individual zone:

The gas/air mixture emitted from the mixture pipe is highly flammable. To avoid the gas/air mixture from backstroking or backfiring, a pressure switch (9) is installed in the differential pressure indication lines. The required constant pressure is adjusted and fixed by a special manual control flap (10) which is installed in the by-pass line of the air control valve (3).

In case of pressure loss, the gas supply is interrupted in the respective control section by the two gas safety valves.

If a backstroke/backfire occurs, a maximum pressure switch indicates this and closes the two gas safety valves.

TECHNICAL FACTS

CAPACITIES

Size	Output
DN 40	40 – 80 kW, max. 9 Sm^3/h
DN 50	100 – 140 kW, max. 15 Sm^3/h
DN 65	160 – 220 kW, max. 22 Sm^3/h
DN 80	250 – 450 kW, max. 43 Sm^3/h

GAS PRESSURES

Type of gas	Pressure
Natural gas/LPG	120 mbar
Combustion air	60 – 80 mbar
Gas/air mixture	max. 60 mbar

THE CORA® SKID

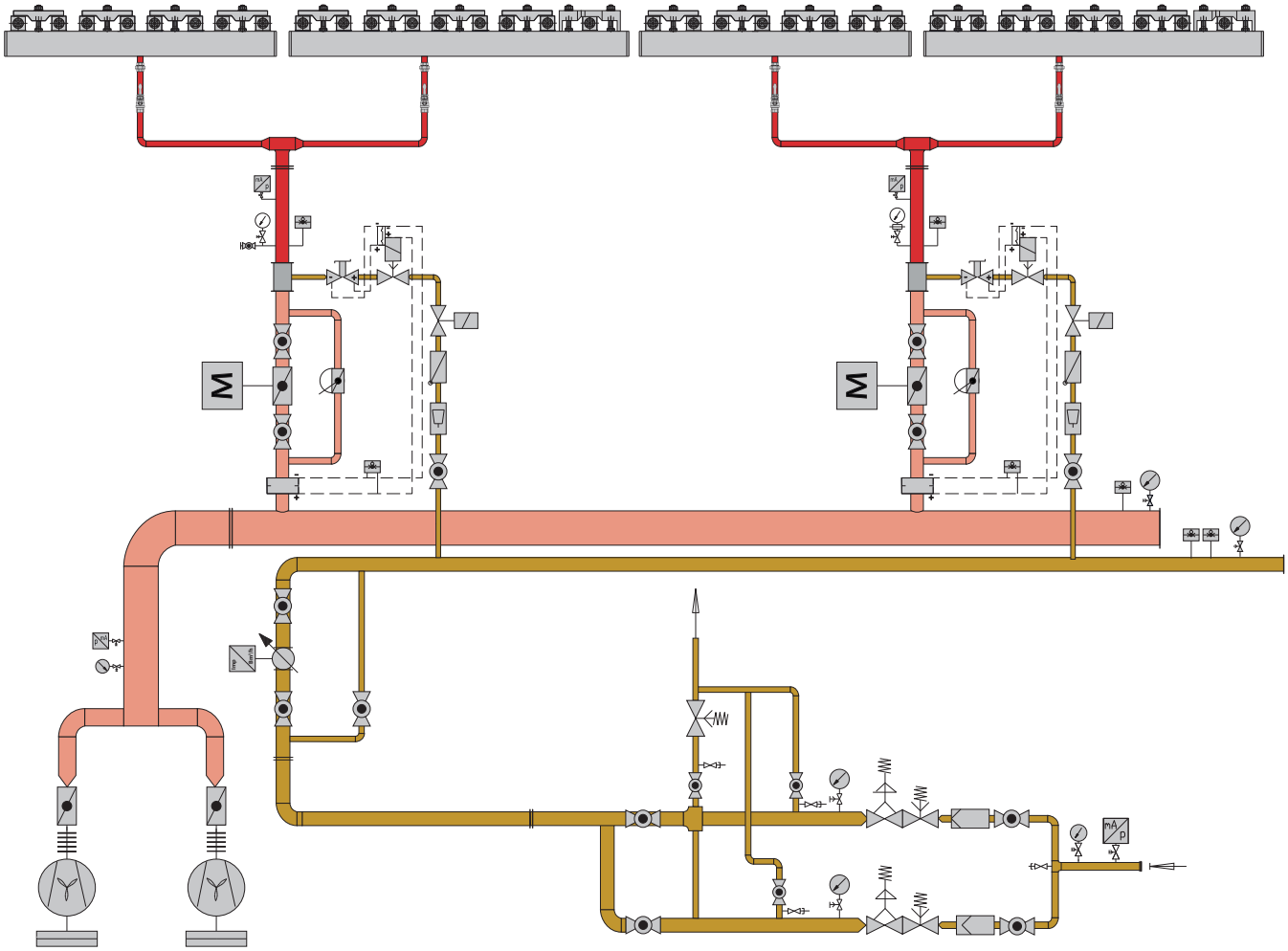

HORN
GLASS INDUSTRIES

AUTOMATIC LAMBDA CONTROL

The atmosphere in forehearths is an important parameter in glass production and quality. Fluctuating heating values of the fuel gas and other inequalities lead to problems in glass production, especially for coloured glass and high-quality glass.

HORN®'s answer to this problem is the EUROX® EpRox system.

It is available as add-on system for HORN®-SCADA-systems as well as stand-alone-system for foreign PLC-systems. With the measuring results of the EpRox system an automatic lambda control for forehearths is possible.

The principle is a zirconium oxide measuring cell which is heated up to 1000 °C. The air/gas premix is catalytically decomposed and analysed.

Together with a solenoid valve unit **only one probe is needed for up to 12 forehearth zones.** The output signals can be processed directly in the HORN®-SCADA-system (add-on) or with the multifunctional unit OM-3 (stand-alone-solution).

Together with an OM-3 unit it is possible to work with our mobile EpRox system for measuring on just one zone. The measuring results are sent to your mobile phone where they are visualised via an app. This solution is especially designed for adjustments.

With OM-3 it is also possible to visualise the measuring results of all zones with a tablet via WLAN. Here the results can be stored and the measured values of all zones can be compared at a glance.

For more information about the EUROX® EpRox system please see our booklet about our EUROX® products.

ADVANTAGES

- **Stable atmospheric conditions also with fluctuating heating values are possible**
- **Fast gas/air ratio control also in near stoichiometric conditions with an accuracy of λ ± 0,05**
- **Storing of the measuring values together with the tablet solution**
- **Fast installation and low maintenance**

The mobile EpRox unit for easy adjustments on-site

The tablet solution for adjustment on-site as well as storing the measuring results

LET'S GO FULL CIRCLE. WWW.HORNGLASS.COM

The key to HORN®'s extensive expertise in all fields of glass melting technology is the profound understanding of each detail within the entire process, making HORN® the specialist for technological progress and innovation for each aspect of a glass plant. In addition to its knowhow about individual elements such as furnaces, HORN® has expanded its services to become a one-stop supplier for turn-key plants. From initial planning to full operation – HORN® stands by you all the way.

PLANNING + ENGINEERING

MANUFACTURING

SERVICE / INSTALLATION + SUPPORT

LET'S GO FULL CIRCLE.

TURN KEY

HORN GLASS INDUSTRIES

HORN® GLASS INDUSTRIES AG
BERGSTRASSE 2
D-95703 PLÖSSBERG/GERMANY

TEL.: +49 9636 / 9204-0
FAX: +49 9636 / 9204-10

WWW.HORNGLASS.COM

06/2020